autocheck

VEHICLE HISTORY REPORT

REPORT NO: JZX100-[redacted]

1998 TOYOTA CHASER TOURER V

Report created by hand on 2021/06/02

VEHICLE DETAILS

Data Sources	USS [redacted]
Reported dates	2019-[redacted]-[redacted]
Lot number	[redacted]
Chassis ID/VIN	JZX100-[redacted]
Make	TOYOTA
Model	CHASER
Mileage	[redacted] 630 km
Engine CC	2500 cc (2.5L)
Reg. Date	1998/12
Grade/Trim	TOURER V
Inspection	N/A
Equipment	AAC
Transmission	AT
Start price	¥10,000
Finish price	Unavailable
Color	WHITE
Condition	4
Sales Status	Unknown

GRADE 4 AUTOCHECK GRADING

Average condition

The Autocheck grading scheme is based on standard Japanese auction grading system. it let's you compare similar vehicles with ease.

Auction grade
4 Average condition

Accident / Repair
No problem found

Mileage report
No problem found

Use history
Private Car

Stolen check
No stolen status

AUTOCHECK FACTS

Auction grade

Vehicle was graded as Average condition.

Odometer Check

No odometer tampering reported

NOTE: This Autocheck Vehicle History Report is based only on Information supplied to Autocheck CO. and available as of 2021-06-02 09:09:25. Other information about this vehicle, including problems, may not have been reported to Autocheck CO. Use this report as one important tool, along with a vehicle inspection and test drive, to make a better decision about your next Japanese used car.

ACCIDENT / REPAIR HISTORY (JAPAN)

Type of record	Reported event	Reported date	Source	Details	Airbag
Collision	Not reported				
Malfunction	Not reported				
Theft	Not reported				
Fire damage	Not reported				
Water damage	Not reported				
Hail damage	Not reported				

REPORTED ODOMETER HISTORY

Reported date	Kilometres	Source
2019-[redacted]-[redacted]	[redacted] 630 km	USS [redacted]

USE HISTORY (JAPAN)

Use in the contaminated regions [4]	Radioactive contamination test fail [5]	Commercial use
Not reported	Not reported	Not reported

MANUFACTURE RECALL HISTORY

Date	Source	Affected part	Details
No recall records found.			

CONDITION SHEET & PHOTOS

Date: 2019-[redacted]-[redacted] Source: USS [redacted] Lot #: [redacted]

No. [redacted]

車歴（自家用以外は記入）	排気量	型式	評価点
	2500	GF-JZX100	4

初度登録年月	車名	乗車・ドア数	グレード	2WD・4WD	内装補助評価
10/12月	チェイサー	4	ツアラーV		C

車検	年 月	シフト	AT	純正品	SR	純AW	PS	PW
走行	[redacted] 630 Km マイル	冷房	AAC		カワ	TV	ナビ	エアB

外色	元色	色替	カラー No.
	シロ →		040

燃料	カソリン・軽油・( )	内装色

輸入・流用	年式	輸入区分	ハンドル
		ディーラー・並行	左・右

証明書類手帳（関証書付）	有・無
※登録と一緒に保管下さい。	

名義変更期限 月 日

セールスポイント
- ディスチャージライト
- 純正アルミ
- ワンオーナー

リサイクル預託金	乗車定員	積載量
12,230円	人	t

登録No.	
車台No.	JZX100-[redacted]
シリアルNo.	

◎注意事項（修復・不具合箇所および状態等）

◎検査員報告（USS使用欄）

ハンドルスレ　内装汚レ

右中心

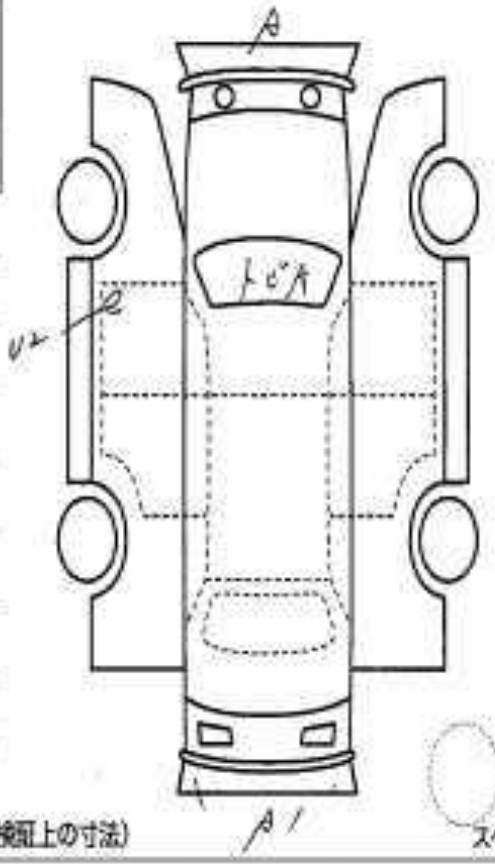

[荷台内寸] 約 X X (cm)

長さ cm	幅 cm	高さ cm	←（車検証上の寸法）

スペア

※必ず油性ボールペンをご使用下さい。水性ボールペンは使用できません。

←純正品に限り該当に○をつけて下さい。

Please proceed to the next page to see English Translation of this condition sheet.

CONDITION SHEET ENGLISH TRANSLATION

Date: 2019-[redacted] Source: USS [redacted] Lot #: [redacted]

Auction No.	Vehicle Use	Displacement	Grade
[redacted]	PRIVATE	2500 CC	TOURER V

Japan Y/M	Make/model	Model code	Door Style
1998/12	CHASER	GF-JZX100	4

Grade	
4	
Exterior	Interior
C	C

Current Inspection (Year/month)
N/A
Mileage in Kms
[redacted] 630 km

original color	change color	color no:
WHITE		040
Fuel		**Interior color**
Gasoline		
Seats	**Drive type**	**Drive**
		RHD

Transmission
AT
Air condition
AAC
Recycling deposit
¥12,230

Sun roof	alloy wheel	power steering	power window
-	✓	✓	✓
Leather	**TV**	**Navi**	**Airbag**
-	-	-	✓

Sales point
Discharge light
Genuine alloy wheels
One owner

Registration number	N/A
Chassis number	JZX100-[redacted]

Inspector Report
Some scratches and dents on exterior
Interior slightly dirty
Steering wheel scuffed
Small scratch on windshield

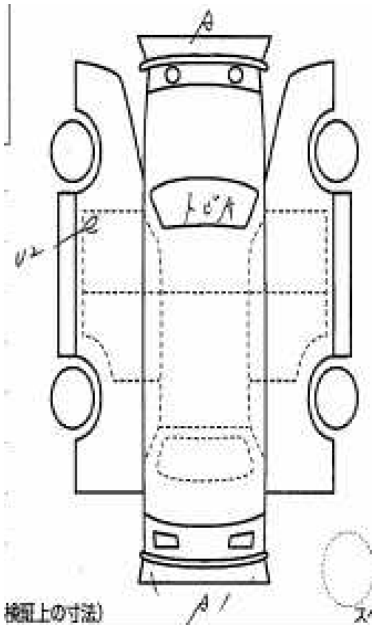

A1	Small scratch
A2	Scratch
A3	Large scratch
B2	Distortion
U1	Small Dent
U2	Dent
G	Stone chip in glass
AU	Dent and Scratch (Small)
X	Part exchange required
W2	Repair Mark/Wave

Length	Width	Height
-	-	-

*Please proceed to the next page to see the full auction list explanation.

CONDITION SHEET EXPLANATION

A1 Small Scratch

A2 Scratch

A3 Big Scratch

B Dent with scratch

B1 Distortion on (radiator) core support or back panel (approximately size of a thumb)

B2 Big Distortion on (radiator) core support or back panel

B1-B4 Large dents

C1 Corrosion

C2 Heavy Corrosion

AU2 Dent and Scratch (Medium).

E1 Few Dimples

E2 Several Dimples

E3 Many Dimples

G Stone chip in glass

H Paint faded or (Thumb size hole from rust, corrosion or rotting)

P Paint damaged marked

BP Panel beaten and re-painted

S1 Rust

S2 Heavy Rust

U1 Small Dent

U2 Dent

U3 Big Dent

Y1 Small Hole or Crack

Y2 Hole or Crack

Y3 Big Hole or Crack

X1 Small Crack on Windshield (approximately 1cm)

R Repaired Crack on Windshield

RX Repaired Crack on Windshield (needs to be replaced)

X Needs to be replaced or crack on glass

XX Replaced

W1 Repair Mark/Wave (hardly detectable)

W2 Repair Mark/Wave

W3 Obvious Repair Mark/Wave (needs to be repainted)

AUCTION GRADE EXPLANATION

6 / S New car

5 Used but appears as new

4.5 Very clean with only minor pin dents & scratches

4 Good condition with normal wear & tear

3.5 Numerous condition faults / possible minor repair

3 Poor condition / noticeable dents & damage / rust / past repair

2 Very poor condition / water damaged

1 Modified (usually performance parts)

0 Repaired

R Repaired (History of being repaired, parts replaced, no quality guarantee, buy at your risk, could be big damages, frame bent possibility.)

RA Accident repaired, been in crash, parts replaced, generally small damages.

*** Ungraded (existing fault / damage)

A - D Body / interior condition (**A – as new**, **B – very clean**, **C – average**, **D – poor**)

E – The car is in bad shape. Rust, corrosion and exterior breakdowns are plenty.

***Verified source (USS [redacted] - 2019-[redacted]-[redacted]

***Verified source (USS [redacted] - 2019-[redacted]-[redacted]

GLOSSARY

1 **Chassis number:** a unique identification number of the vehicle in Japan (same as VIN in the USA or Europe)

2 **Safety grade:** Determining the overall collision safety performance evaluation – For the driver's seat, the results of the full-wrap frontal collision test, offset frontal collision test, and side collision test are added together and evaluated to 6 different levels. For the Frontal passenger's seat, the results of the full-wrap frontal collision test and the side collision test (results for the driver's or the front passenger's seat are used) are added together and evaluated to 6 different levels.

3 **Title information:**

Registered – qualified for driving in Japan

Deregistered Temporarily – not qualified for driving in Japan, usually a temporary title during the ownership change

Deregistered Completely – not qualified for driving in Japan, the vehicle is determined to be scrapped

Deregistered to Export – not qualified for driving in Japan , the vehicle is determined to be exported

4 **Use in the contaminated regions:** The Fukushima Daiichi nuclear disaster was a catastrophic failure at the Fukushima I Nuclear Power Plant on 11 March 2011, resulting in a meltdown of three of the plant's six nuclear reactors. As a result, some areas in the following prefectures were contaminated: Fukushima, Miyagi, Ibaraki, Tochigi.

5 **Radioactive contamination test:** radioactive contamination inspection that was started in July 2011 as a preventive measure for exporting contaminated vehicles from Japan. The inspection is being conducted since in all sea ports of Japan under the supervision of The Japan Harbor Transportation Association (JHTA).

MLIT – Ministry of Land, Infrastructure, Transport and Tourism.

AUTOCHECK.JP DEPENDS ON ITS SOURCES FOR THE ACCURACY AND RELIABILITY OF ITS INFORMATION. THEREFORE, NO RESPONSIBILITY IS ASSUMED BY AUTOCHECK.JP OR ITS AGENTS FOR ERRORS OR OMISSIONS IN THIS REPORT. AUTOCHECK.JP FURTHER EXPRESSLY DISCLAIMS ALL WARRANTIES, EXPRESS OR IMPLIED, INCLUDING ANY IMPLIED WARRANTIES OF MERCHANTABILITY OR FITNESS FOR A PARTICULAR PURPOSE.

© 2021 NEXCA 株式会社. All rights reserved | 神奈川公安委員会許可第452750021276号